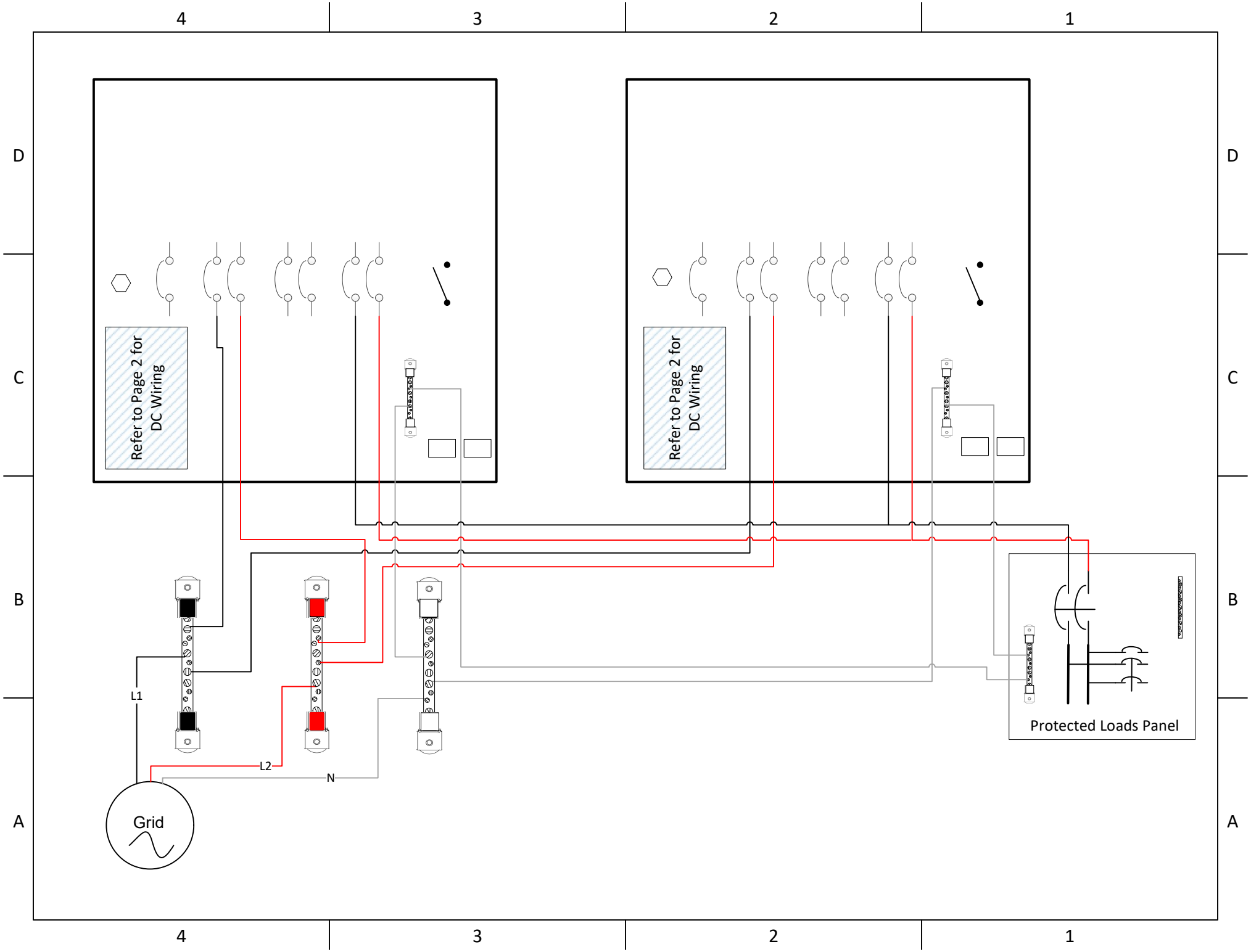
Refer to Page 2 for DC Wiring
Refer to Page 2 for DC Wiring
L1
L2
N
Grid
Protected Loads Panel

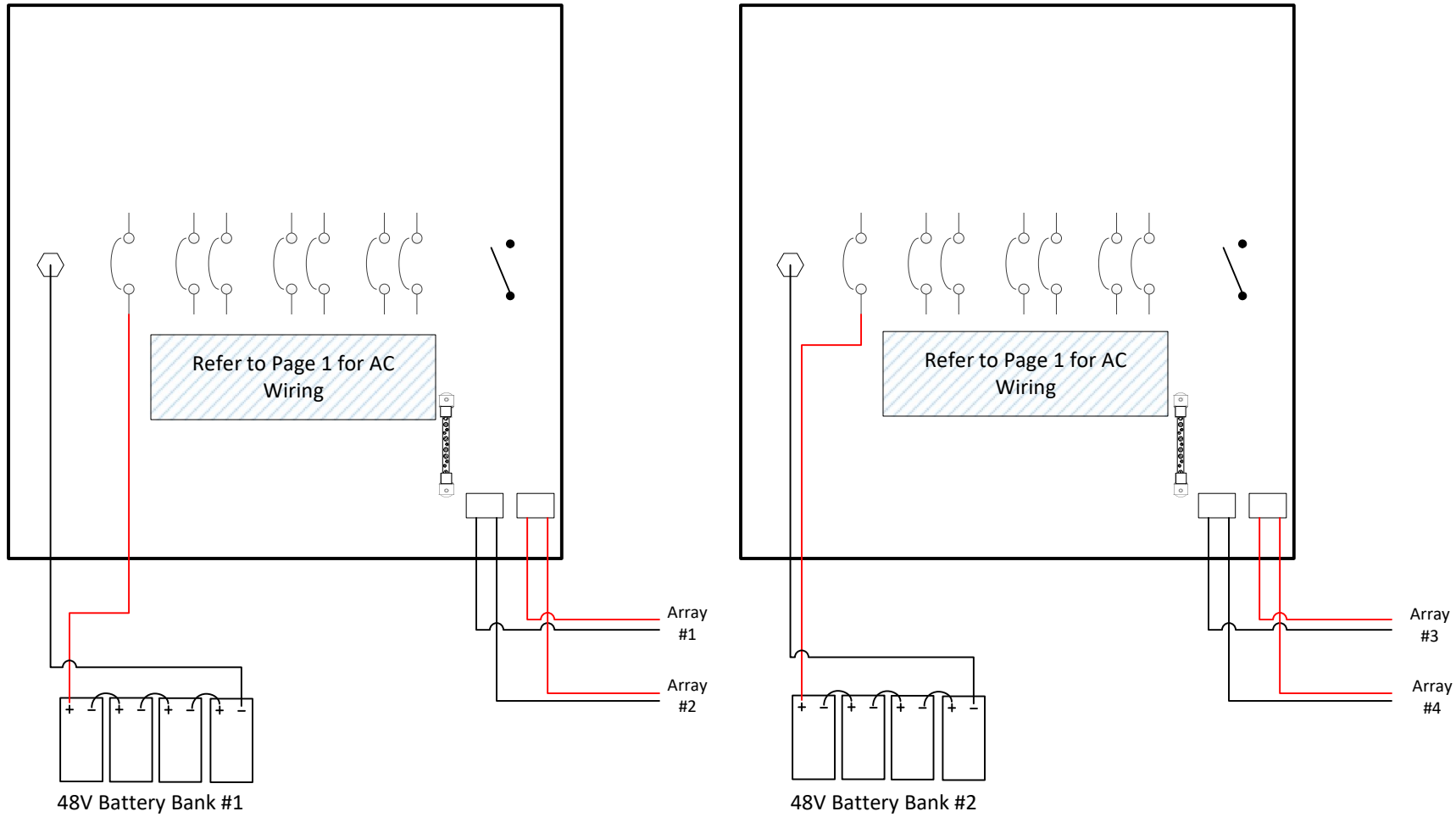
Refer to Page 1 for AC Wiring
Array #1
Array #2
48V Battery Bank #1
Refer to Page 1 for AC Wiring
Array #3
Array #4
48V Battery Bank #2